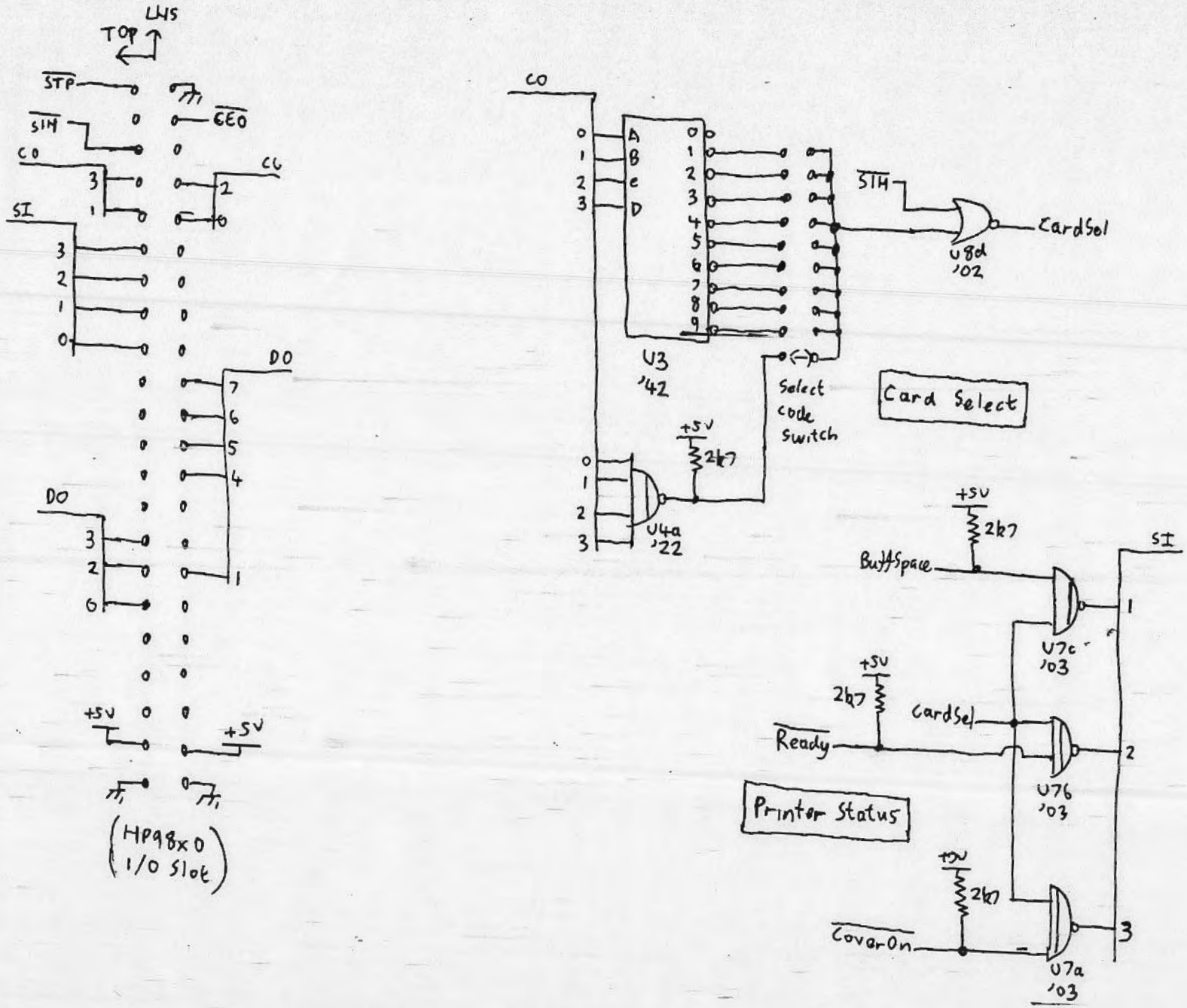

HP 11336 Printer Interface — Sheet ①

11336-66591

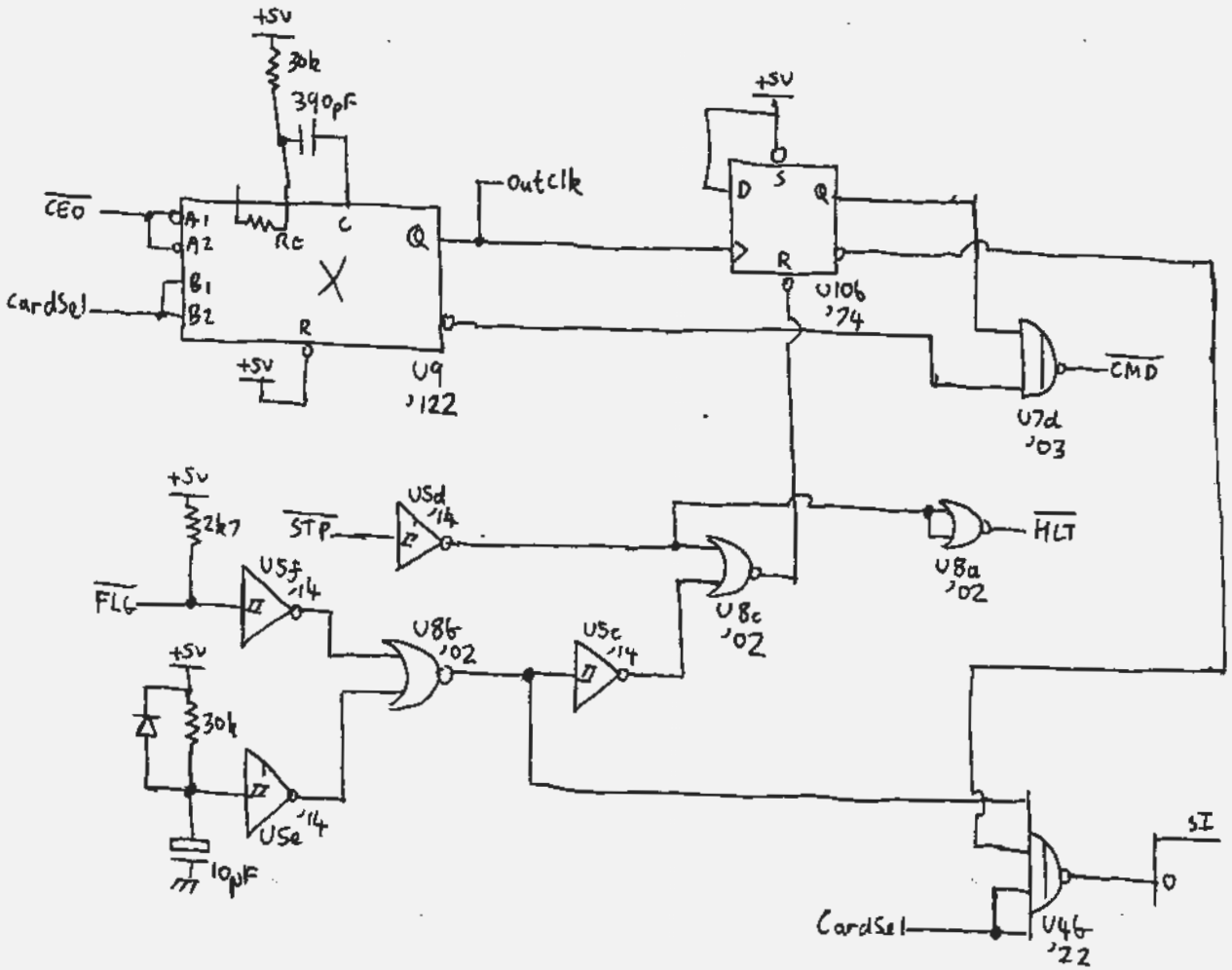

HP11336 Printer Interface Sheet 2 11336-66591

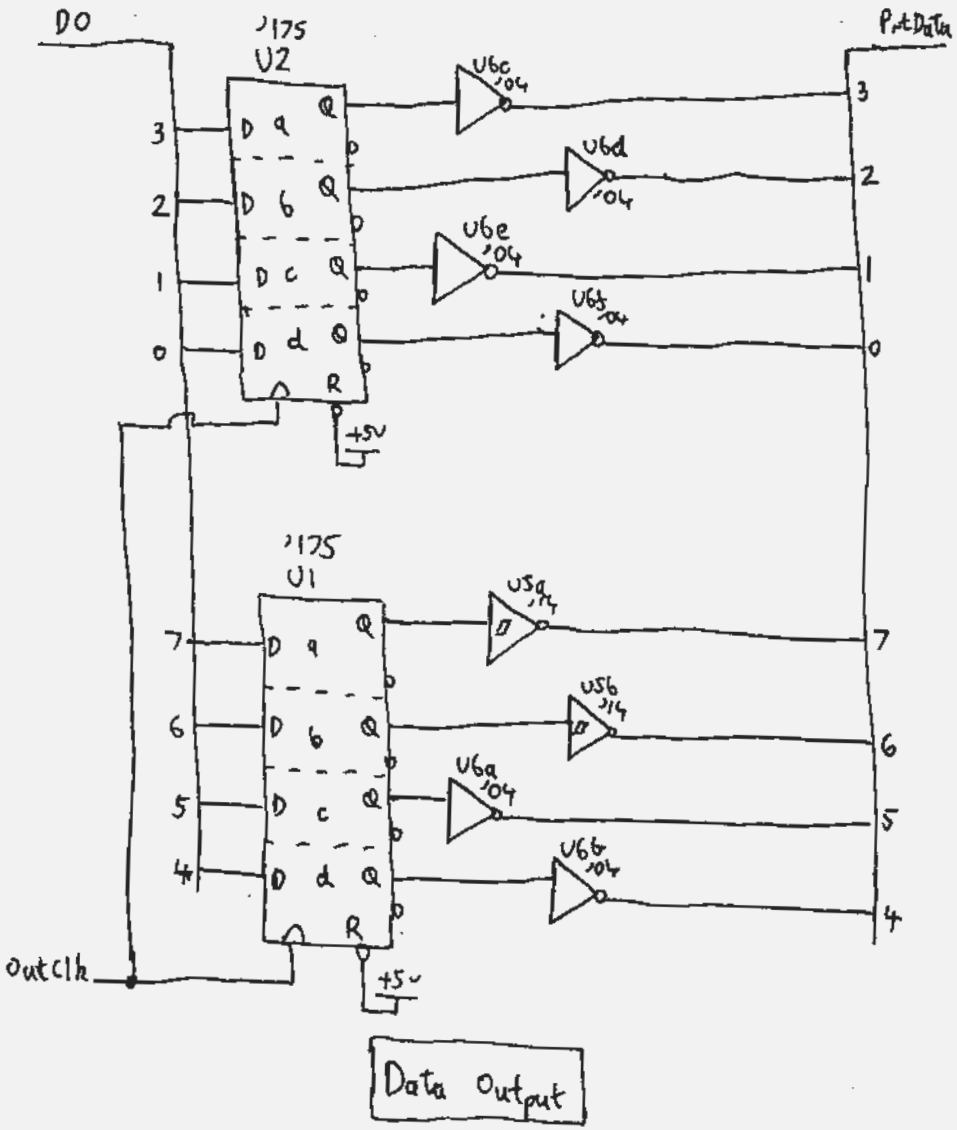

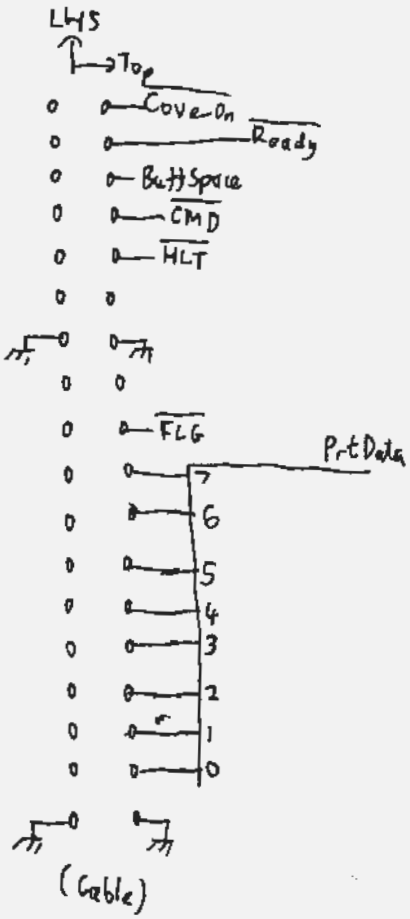

HP11336 Printer Interface Sheet 3 11336 — 66591

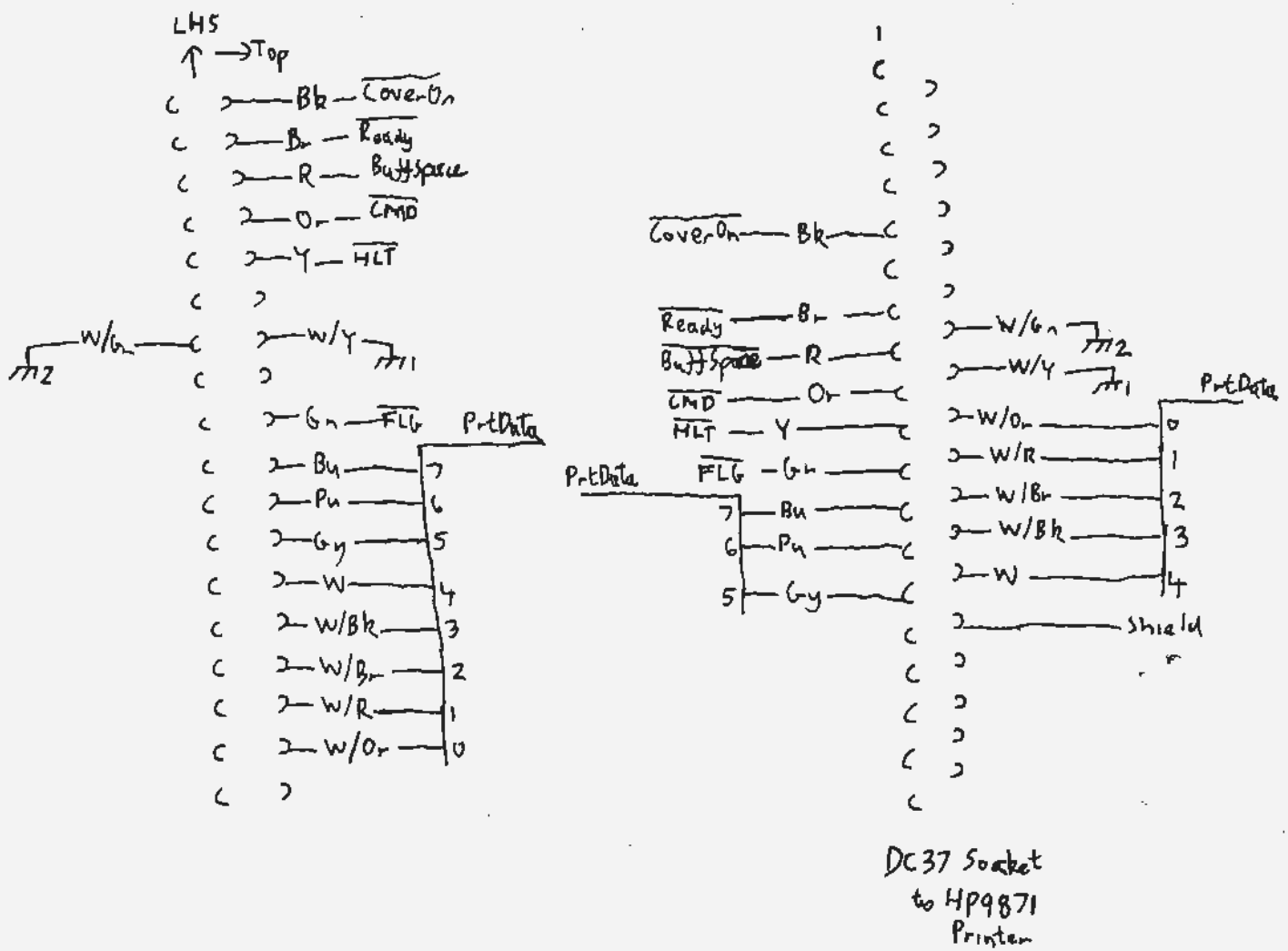

HP 11336 Printer Interface Cable